DOI: 10.21440/0536-1028-2021-8-15-23

Calculating the polymer operating string under asymmetric ice compression in permafrost

Vladimir A. Stetiukha[1]
[1] Transbaikal State University, Chita, Russia
e-mail: stetjukha_chita@mail.ru

Abstract

Research objective *is to determine the results of ice impact on the polymer operating string and adjacent rock mass in the most probable type of computational model that considers the asymmetry of the load imposed by water refreezing in the casing string annulus. The solution to this problem makes it possible to consider the possibility of using polymer pipes in permafrost.*

Research relevance *is conditioned by the known facts of water freezing in the casing string annulus at low temperatures. In practice, water freezing causes significant deformations and damage operating strings and pipe joints creating emergency situations that can disrupt flow processes.*

Research methods. *The finite element method is used to calculate the polymer operating string, placed in the rock mass. The proposed method considers the asymmetry of the load imposed on the pipe and uses a lot of parameters to create the computational model. The method makes it possible to include pipe, ice and adjacent rock mass in the computational model considering their properties.*

Research results *establish the degree of non-uniform loading effect on pipe's deformation, strength and stability. Pipe calculation results for the conditions of symmetric and asymmetric compression by ice are compared. The results of using a nonlinear model of rock are considered. A significant impact of the composition of rocks around the well has been revealed. The conditions have been determined in which polymer pipes can bear the load during refreezing under asymmetric arrangement of the pipe in the well.*

Keywords: *ice compression; refreezing; permafrost; well; operating string; loading asymmetry.*

Introduction. Pipes made of polyvinyl chloride [1] and other polymers [2] are widely used in mining, oil and gas industries. Such pipes are used for solution collection ponds in heap leaching and as operating and casing strings in underground leaching. In permafrost, well-drilling hydraulic technologies are used to create emergency water storage tanks, underground oil and gas condensate storage facilities, and to store industrial waste [3]. These applications of pipes are also common in regions with severe climate and permafrost [6], such as Russian northern regions [4], Canada, etc. [5]. Papers [7] and [8] indicate the boundaries of permafrost distribution in Norway and in the regions of the North Atlantic. Paper [9] determines the range of permafrost temperature variation in different conditions of occurrence in several countries of the Northern hemisphere; paper [10] determines temperature variability. Permafrost temperatures range from –15 °C in northern Greenland to 0 °C in other regions on the southern boundaries of permafrost occurrence. Permafrost conditions in the regions of permafrost should be considered when developing mineral deposits. It is essential for in situ leaching. The existing design standards for such mining enterprises do not always take into account the distinguishing features of permafrost conditions in the northern regions and their impact on the reliability of boreholes. The indicated features also include low average annual air temperatures, large annual and daily air temperature ranges, and a thin snow cover. At enterprises in the above-noted regions, under certain circumstances, ice forms in the annular space. Polymer string deformations that violate safe operation conditions are recorded when mining uranium by in situ leaching in

permafrost [11] when water freezes in the casing string annulus. A lot of accidents with polymer pipes are caused by the impact of non-design loads during repair, installation or emergency shutdown.

Previous fundamental research at the Vankor field [12] and at the Khiagda ore field [13] confirm the development of significant pressure on pipes when water freezes and ice forms in the annular space during well operation. Kuznetsov V. G. [14] noted that the value of the pressure on the pipe, obtained by experiment at one of the fields when water freezes, reached 39 MPa. In the papers indicated above, the load on pipe caused by water freezing in the casing string annulus is described as absolutely symmetric,

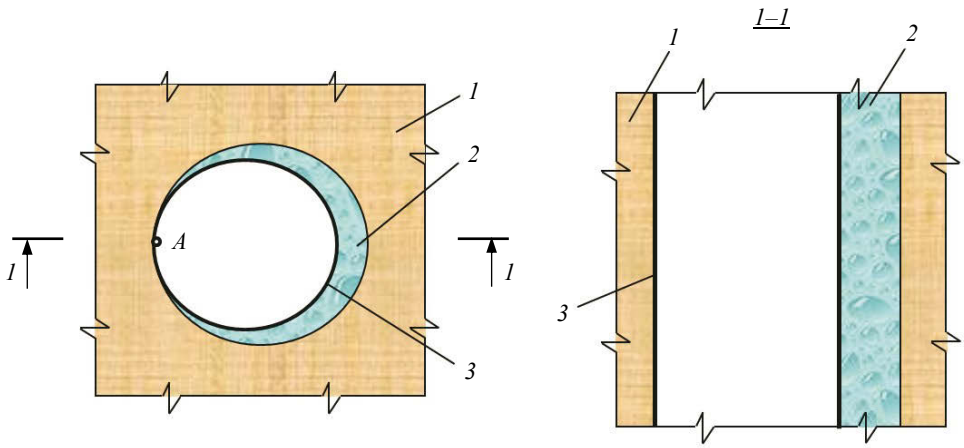

Figure 1. Fragment of a pipe in the zone of water refreezing:
1 – frozen rock mass; *2* – ice; *3* – pipe
Рисунок 1. Фрагмент трубы в зоне обратного замерзания воды:
1 – массив мерзлой породы; *2* – лед; *3* – труба

while expressions for the contact and critical pressure include a limited number of parameters. Polymer pipes application in severe climate requires strict technical justification. However, fundamental research papers [12, 13] and paper [15] that calculate pressure and phase content in the casing string annulus, as well as other well-known publications devoted to downhole polymer operating strings calculation, do not consider the issues of operating strings interaction with ice and adjacent rock when asymmetric loading from water freezing is imposed on the pipe.

Formulation of the problem. Predicting the consequences of external action imposed on a polymer pipe when it is compressed by ice is an urgent task that solves the problem of such pipes reliability. In this case, studies should consider the variety of external impacts on pipes, including asymmetric loading from water freezing, and take into account the changing properties of adjacent ice and rock at different stages of facility operation. These conditions require a volumetric model. In real-life conditions, the effect of ice in the course of water freezing is usually asymmetric. An asymmetric computational model is formed when the pipe in the well shifts initially before contacting the rock, when the water freezes unevenly due to an inhomogeneous temperature field in the adjacent rock, when the cavity develops in the thawing rock and after that water freezes in it. When assessing the structure’s reliability, the question arises of how different are the consequences of ice impact when water freezes in the annular space under symmetric and asymmetric loadings imposed on the pipe.

Research objective is to evaluate the outcome of asymmetric loading on a polymer operating string when water freezes in the casing string annulus. The obtained results

should help assessing the possibility of using polymer pipes in the permafrost rocks of various compositions.

Research methods. The finite element method and *LIRA* software package are used to assess operating string bearing capacity. The finite element method has proved itself to be good when calculating a pipe symmetrically loaded with ice pressure [16] and in determining stresses in pipes under repair [17]. A computational model shown in Figure 1 is built when solving the strength problem. The model includes a pipe, an ice band and adjacent frozen rock. The computational model describes empty operating string. Unplasticised polyvinyl chloride (PVC-U) pipe, ice, and adjacent frozen rock are formed of volumetric finite elements. Along the pipe's longitudinal axis, subdivision into finite elements is made in increments of 0.1 m. In the annular direction, the pipe is subdivided into 21 elements. Ice finite elements are represented as triangular prisms.

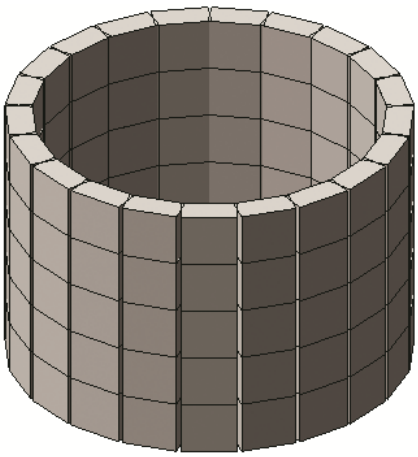

Figure 2. Fragment of a pipe with a subdivision into finite elements
Рисунок 2. Фрагмент трубы с разбивкой на конечные элементы

In case of asymmetric arrangement of the pipe in the well, the least favorable instance has been considered when the pipe adjoins the contour of the well at point *A* (Figure 1). The figure shows a fragment of a pipe and adjacent rock mass. In this case, finite elements volume change at water-ice transition becomes non-uniform along the pipe's contour. As a result, external load on the pipe is also non-uniform. The computational model includes adjoining rock masses within a radius of 1 m from the pipe reflecting the behavior of rock under load in a reasonably objective way. In the rock mass selected from the half-space, displacements on its contour are limited by links at its boundaries in the corresponding directions.

The temperature drop in the volumetric elements of ice is simulated to create external load. The temperature drop provides the necessary 9% growth of the elements volume during the water-ice transition in the casing string annulus. Iterations make it possible to consider the deformations of all elements in the model objectively. Calculation determines stresses and displacements of nodes and volumetric elements of the computational model.

When calculating the stability of the operating string, the PVC-U pipe is modeled by a cylindrical surface in the form of a shell with a specified thickness. The shell fragment subdivision into finite elements is shown in Figure 2. The computational model makes it possible to consider simultaneous deformations of the pipe, ice and rock mass. When analyzing cylindrical shell stability in *LIRA*, both membrane and other forces within the structure are considered. Safety factor of stability k_s reflects the shell's ability to bear the imposed load according to the stability criterion, i.e. to maintain its shape or position. The safety factor of stability is determined by the ratio of the buckling load to the actual design load. The structure is not stable under safety factor less than 1.

Increase in water volume during ice formation in the casing string annulus simulates loading. At the first step of loading, the pipe adjoins the rock mass at the contact of two surfaces, point *A* (Figure 3). When pipe and rock deform, the contact surface expands in both directions from point *A*. Actual pipe-rock contact in the *BC* section as a result

of pipe and rock deformations has been established at the stage of total freezing of water in the casing string annulus. The pipe-rock contact points in the *BC* section are connected by infinitely rigid bars. Upon complete freezing of water in the casing string annulus, a non-uniform radial loading from ice formation is transferred to the pipe, as shown in Figure 3.

Results and discussion. A PVC-U pipe with a thick wall and a steel pipe (GOST 32528-2013) were the objects of study. The outside diameter of all pipes was taken equal to 140 mm. The following characteristics of materials were used. Characteristics of a polymer pipe (GOST R 51613) are as follows: Young's modulus E = 3000 MPa, Poisson's ratio ν = 0.36, density γ = 1.4 t/m^3. Corresponding ice characteristics: E = 900 MPa [18], ν = 0.34 [19], γ = 0.9157 t/m^3. Sand characteristics: E = 3650 MPa, ν = 0.13, γ = 1.6 t/m^3. Loam characteristics: E = 1500 MPa, ν = 0.14, γ = 1.6 t/m^3. Steel pipe material characteristics: E = 200,000 MPa, ν = 0.3, γ = 7.85 t/m^3 [20].

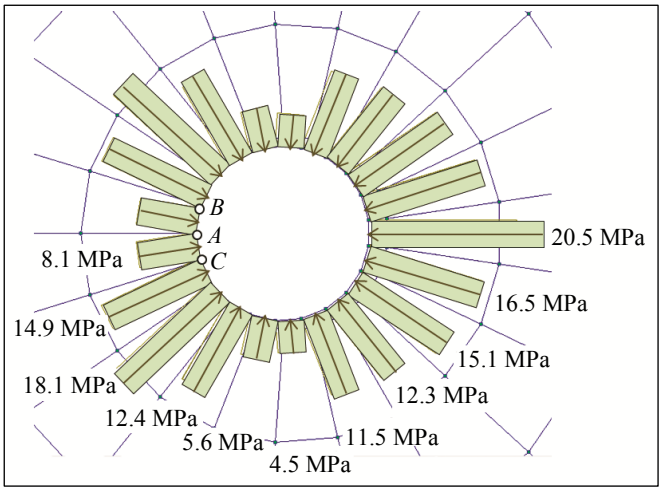

Figure 3. Computational model for checking the pipe for stability
Рисунок 3. Расчетная схема для проверки трубы на устойчивость

It was previously established in [10] that a PVC pipe with a wall thickness as with GOST does not bear the imposed loading by strength and does not meet the stability conditions under symmetric loading. For this reason, the paper considers pipes with a wall thickness increased up to 16 mm. Under symmetric loading, these pipes meet the required conditions for strength and stability in an instance when a loading from water freezing in the casing string annulus is imposed. In this instance, with 171.4 mm borehole diameter and 140 mm pipe diameter, the uniform gap around the pipe perimeter is 15.7 mm.

First, the strength problem was solved to estimate the individual parameters effect on the stress-strain state of the elements in the model under consideration. The pipe strength analysis results are given in Table 1.

The first line of the table shows calculation results for a pipe placed in sandy rocks under symmetric loading to compare with the asymmetric loading [16]. The pipe and borehole dimensions are the same as those accepted for asymmetric loading. When simulating PVC-U pipe symmetric loading, the maximum ring stress in the pipe does not exceed the strength characteristics of the material (GOST R 51613-2000). The external pressure on a symmetrically compressed pipe created in this instance does not exceed the critical pressure as well (the stability condition is met).

The second line of the table shows calculation results for a pipe placed in sandy rocks under asymmetric loading. The dimensions of the ice band on one side of the pipe

reaches a maximum value of 31.4 mm. Since in this instance the gap between the pipe and the borehole wall with ice inside increases, the maximum pressure of 20.5 MPa imposed on the pipe and rock, also increases significantly. In the process of ice pressure loading, under asymmetric loading, the pipe takes an elliptical shape. Besides, the outside diameter of the pipe decreases by 1.03 mm horizontally, and increases by 0.3 mm vertically. The ring strengths in the pipe are non-uniform. The greatest ring strength is 21.4 MPa, which does not exceed the strength characteristics of the material (GOST R 51613-2000). Figure 4 shows the displacement isofields in the elements of the model under consideration along the horizontal axis. At the section with the thickest ice band, highlighted in dark on the isofields, displacements reach the highest values.

Table 1. Calculation results of a pipe during compression with ice
Таблица 1. Результаты расчета трубы при обжатии льдом

Features of instances	Maximum thickness of the ice band, mm	Pipe wall thickness, mm	Maximum pressure on the pipe, MPa	Maximum gap increase when water freezes, mm	Maximum ring strength, MPa
Symmetric loading, rock–sand	15.7	16.0	12.6	1.04	21.3
Asymmetric loading, rock–sand	31.4	16.0	20.5	1.03	21.4
Asymmetric loading, rock–loam	31.4	16.0	17.5	0.39	6.77
Asymmetric loading, rock–loam. Physical nonlinearity of rock	31.4	16.0	20.7	1.10	19.9
Asymmetric loading. GOST steel pipe, rock–sand	31.4	4.5	29.6	0.28	79.9

In the instance when a pipe is placed in loamy ground (third line of the table), the pressure on the pipe decreases to 17.5 MPa, while the ring stress in the pipe decreases by more than 3 times because the rock mass deformation is more significant than in the previous instance. The outside diameter of the pipe increases by 0.4 mm vertically, and decreases by 0.8 mm horizontally. The strength condition is met.

When calculating the frozen rock (Table 1), the pressure on the pipe from the ice band grows by 18% if the physical nonlinearity is taken into account. Pipe deformations and maximum ring stresses also grow in this instance. The strength condition is still met.

So it follows from the results presented in the table that under asymmetric loading on the pipe, the strength conditions are met in all considered instances. In the course of pipe strength calculations, it was found that the ring strength is key for pipe bearing capacity, since under constrained deformations when the annular space is filled with ice, the bending moments in the pipe remain small and are not discussed further. The obtained results indicate the simultaneous work of the operating string and rock. The load created by ice pressure is transferred to the rock mass deforming it, which in turn reduces loading on the operating string and deformations. The effect of such loading redistribution becomes evident when sandy rock is replaced by loam (Table 1). Greater deformability of loam results in much lower pressure on the pipe and much lower ring stresses in the pipe.

At the following stage of research, for each instance of operating string asymmetric loading, the pipe was analyzed for stability in accordance with the described procedure.

The nature and size of the radial loading when the pipe is placed in sandy rocks at the final stage of ice formation are shown in Figure 4. When the pipe is loaded as noted above, it loses stability. In this instance, the safety factor of stability is k_s = 0.19. The safety factor of stability for a well in loam is k_s = 0.17, considering the physical nonlinearity of the rock, this factor is k_s = 0.19. Pipe stability test in the conditions of asymmetric external loading reveals that stability factor is critical in the calculations of the objects under consideration. The stability conditions for all the considered instances are not met. It indicates that the operating string collapses and loses its bearing capacity.

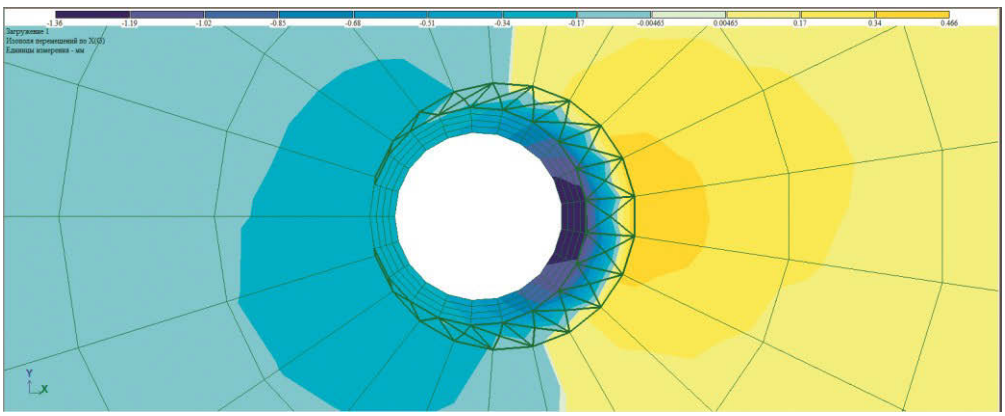

Figure 4. Isofields of displacements along the *x*-axis
Рисунок 4. Изополя перемещений по оси *x*

Since the results of polymer pipe stability analysis under asymmetric loading showed that the pipe cannot bear the load imposed to it, several suggestions have been explored to replace it with a steel pipe (GOST 32528-2013). When the steel pipe wall is 4.5 mm thick, the strength condition is met. The pipe bears an external load of 29.5 MPa under the ring strength of 79.9 MPa in the wall. In this instance, the stability condition is not met, since safety factor of stability is k_s = 0.26. As it was found earlier, the condition of steel pipe stability under the specified asymmetric loading is met with a safety factor of stability k_s = 1.29 under a wall thickness of 8 mm.

Conclusions. The most objective volumetric computational model has been formed. The method for the operating string calculation has been implemented. The method considers the reverse freezing of water in the annular space in severe operating conditions under asymmetric loading.

It has been found that when water freezes in the annular space under the specified conditions, asymmetric loading of a polymer pipe can lead to its damage. The same is not observed for similar operating conditions of a string under symmetric loading.

It has been found that the properties of adjacent rock mass should be considered within this method for pipe calculation under reverse freezing of water in the annular space.

In the instance when asymmetric loading acts on a pipe, the results of the stability analysis are critical in assessing its bearing capacity, when the cause of the pipe damage is confirmed, i.e. the loss of stability. By applying a PVC-U pipe, it is possible to achieve the operability of polymer operating string at mining enterprises a only under conditions eliminating the impact of asymmetric loading, namely the creation of special devices fixing the position of the pipe in a troublesome zone where water freezing is not excluded, application of technical and technological solutions that completely exclude water freezing in the casing string annulus, and replacement of PVC-U pipes in troublesome areas with steel pipes with geometric dimensions established by the calculation.

БИБЛИОГРАФИЧЕСКИЙ СПИСОК

1. Ivanov A. G., Solodov I. N. Selection of casing material for in-situ leach wells. *Gornyi zhurnal = Mining Journal*. 2018; 7: 81–85. Available from: doi: 10.17580/gzh.2018.07.16 (In Russ.)

2. Stovmanenko A. Iu., Anushenkov A. N. Perspectives of using pipelines from polymer materials during transportation of cast packing filled mixtures. *Izvestiia Uralskogo gosudarstvennogo gornogo universiteta = News of the Ural State Mining University*. 2016; 4(44): 68–71. Available from: doi: 10.21440/23072091-2016-4-68-71 (In Russ.)

3. Khrulev A. S. Well-drilling hydraulic technology: issues and options. *Vestnik Rossiiskoi akademii estestvennykh nauk = Bulletin of the Russian Academy of Natural Sciences*. 2013; 5: 51–54. (In Russ.)

4. Makariev L. B., Tsaruk I. I. Mineral resource base of the uranium of the southern margin of the Siberian Platform. In: *Uranium: geology, resources, and production: Proceedings of the 4th Internat. Symposium, 28–30 November 2017*. Moscow: VIMS Publishing; 2017. p. 60–61. (In Russ.)

5. Wang F., Song Z., Cheng X., Ma H. Patterns and features of global uranium resources and production. *Earth and Environmental Science: IOP Conf. Ser.: Institute of Physics Publishing*. 2017; 94: 1–7.

6. World distribution of uranium deposits (UDEPO) with uranium deposit classification. IAEA, Vienna, 2009. Printed by the International Atomic Energy Agency in Austria. 2009. 126 p.

7. Magnin F., Etzelmuller B., Westermann S., Isaksen K., Hilger P., Hermanns R. Permafrost distribution in steep rock slopes in Norway: measurements, statistical modelling and implications for geomorphological processes. *Earth Surface Dynamics*. 2019; 7: 1019–1040. Available from: https://doi.org/10.5194/esurf-7-1019-2019

8. Westermann S., Ostby T. I., Gisnas K., Schuler T. V., Etzelmüller B. A ground temperature map of the North Atlantic permafrost region based on remote sensing and reanalysis data. *The Cryosphere*. 2015; 9: 1303–1319.

9. Obu J., Westermann S., Bartsch A., Berdnikov N., Christiansen H., Dashtseren A., Delaloye R., Elberling B., Etzelmuller B., Kholodov A., Khomutov A., Kaab A., Leibman M., Lewkowicz A., Panda S., Romanovsky V., Way R., Westergaard-Nielsen A., Wu T., Yamkhin J., Zou D. Northern Hemisphere permafrost map based on TTOP modelling for 2000–2016 at 1 km^2 scale. *Earth-Science Reviews*. 2019; 193: 299–316. Available from: https://doi.org/10.1016/j.earscirev.2019.04.023

10. Tao J., Koster R., Reichle R., Forman B., Xue Y., Chen R., Moghaddam M. Permafrost variability over the Northern Hemisphere based on the MERRA-2 reanalysis. *The Cryosphere*. 2019; 13: 2087–2110. Available from: https://doi.org/10.5194/tc-13-2087-2019

11. Radin A. I. The distinguishing features of wells with TDS in the permafrost zone. In: *New ideas in the Earth sciences: Proceedings of the 14th Internat. Sci. Pract. Conf. Moscow: RSUH Publishing*. 2019. 4. P. 293–294. (In Russ.)

12. Zverev G. V., Tarasov A. Iu. Calculation and analysis of the influence of permafrost on well no. 338 fixing of Vankorskoe field during operation. *Vestnik Permskogo natsionalnogo issledovatelskogo politekhnicheskogo universiteta. Geologiia. Neftegazovoe i gornoe delo = Perm Journal of Petroleum and Mining Engineering*. 2013; 8: 41–51. (In Russ.)

13. Arsentiev Iu. A., Nazarov A. P., Zabaikin Iu. V., Ivanov A. G. Calculation of polymer operating strings for the conditions of the permafrost. *Actual problems and prospects of economic development: Russian and foreign experience*. 2019; 21: 27–32. (In Russ.)

14. Kuznetsov V. G. *Methods and technology for improving well lining durability in the permafrost (problems and solutions): DSc in Engineering abstract of diss*. Tyumen; 2004. (In Russ.)

15. Leonov E. G., Zaitsev O. Iu. Calculating phases content and pressure at aqueous media freezing at the casing string annulus and the tubing-casing annulus at freezing. *Stroitelstvo neftianykh i gazovykh skvazhin na sushe i na more = Construction of Oil and Gas Wells on Land and Sea*. 2005; 1: 10–16. (In Russ.)

16. Stetiukha V. A., Zhelezniak I. I. Methodology for calculating the stability of the polymer operating string in permafrost. *Zapiski Gornogo instituta = Journal of Mining Institute*. 2020; 241: 22–28. Available from: doi: 10.31897/PMI.2020.1.22 (In Russ.)

17. Khademi Zahedi R., Shishesaz M. Application of a finite element method to stress distribution in burried patch repaired polyethylene gas pipes. *Underground Space*. 2019; 4(1): 48–58. Available from: https://doi.org/10.1016/j.undsp.2018.05.001

18. Kamarainen J. *Studies in ice mechanics*. Helsinki: Helsinki University of Technology; 1993.

19. Bychkovskii N. N., Gurianov Iu. A. *Icy construction sites, road, and crossings*. Saratov: SSTU Publishing; 2005. (In Russ.)

20. Rudov S. E., Shapiro V. Ia., Grigoriev I. V., Kunitskaia O. A., Grigorieva O. I. Mathematical modeling of compacting process of the frozen soil under the influence of forest machines and logging systems. *Sistemy. Metody. Tekhnologii = Systems. Methods. Technologies*. 2018; 3(39): 73–78. Available from: doi: 10.18324/2077-5415-2018-3-73-78 (In Russ.)

Received 15 October 2021

Information about author:

Vladimir A. Stetiukha – DSc (Engineering), Associate Professor, professor of Department of Strength of Materials and Soil Mechanics, Transbaikal State University. E-mail: stetjukha_chita@mail.ru; https://orcid.org/0000-0002-4553-9558

УДК 622.245.1 DOI: 10.21440/0536-1028-2021-8-15-23

Расчет эксплуатационной колонны из полимерного материала при асимметричном обжатии льдом в многолетнемерзлых породах

Стетюха В. А.[1]
[1] Забайкальский государственный университет, Чита, Россия.

Реферат

Целью работы *является определение результатов воздействия льда на эксплуатационную колонну из полимерного материала и примыкающие массивы пород при наиболее вероятном типе расчетной модели, учитывающем асимметрию нагрузки, создаваемой при обратном замерзании воды в заколонном пространстве. Решение обозначенной проблемы позволяет определить возможность использования труб из полимерных материалов в условиях распространения многолетнемерзлых пород.*

Актуальность задачи *обусловлена наличием известных фактов замерзания воды в заколонном пространстве в условиях эксплуатации труб при низких температурах. В результате замерзания воды на практике отмечаются значительные деформации и повреждения колонн и стыков труб, создающие аварийные ситуации, которые могут нарушить технологические процессы.*

Методология исследований. *Используется методика расчета эксплуатационной колонны из полимерного материала, размещенной в массиве породы, методом конечных элементов. Предлагаемая методика отличается возможностью учета асимметрии действующей на трубу нагрузки и использованием большого количества параметров при формировании расчетной модели. Методика позволяет включать в расчетную схему трубу, лед и примыкающие массивы пород, учитывая их свойства.*

Результаты исследований *устанавливают степень влияния неравномерного загружения трубы на ее деформации, прочность и устойчивость. Приводится сравнение результатов расчета трубы в условиях симметричного и асимметричного обжатия льдом. Рассматриваются результаты использования нелинейной модели породы. Выявлено значительное влияние состава пород в районе скважины. Определены условия, при которых трубы из полимерных материалов способны воспринимать нагрузку при обратном промерзании при асимметричном размещении трубы в скважине.*

Ключевые слова: *обжатие льдом; обратное промерзание; многолетнемерзые породы; скважина; эксплуатационная колонна; асимметрия нагрузки.*

БИБЛИОГРАФИЧЕСКИЙ СПИСОК

1. Иванов А. Г., Солодов И. Н. Выбор материала обсадных труб для оборудования эксплуатационных скважин подземного выщелачивания // Горный журнал. 2018. № 7. С. 81–85. DOI: 10.17580/gzh.2018.07.16

2. Стовманенко А. Ю., Анушенков А. Н. Перспективы применения трубопроводов из полимерных материалов при транспортировании литых закладочных смесей // Известия УГГУ. 2016. Вып. 4(44). С. 68–71. DOI: 10.21440/23072091-2016-4-68-71

3. Хрулев А. С. Скважинная гидротехнология – проблемы и решения // Вестник Российской академии естественных наук. 2013. № 5. С. 51–54.

4. Макарьев Л. Б., Царук И.И. Минерально-сырьевая база урана южной окраины Сибирской платформы // Уран: геология, ресурсы, производство: матер. Четвертого междунар. симпозиума, 28–30 ноября 2017 г. М.: ВИМС, 2017. С. 60–61.

5. Wang F., Song Z., Cheng X., Ma. H. Patterns and features of global uranium resources and production // Earth and Environmental Science: IOP Conf. Ser.: Institute of Physics Publishing. 2017. Vol. 94. P. 1–7.

6. World distribution of uranium deposits (UDEPO) with uranium deposit classification. IAEA, Vienna, 2009. Printed by the International Atomic Energy Agency in Austria. 2009. 126 p.

7. Magnin F., Etzelmuller B., Westermann S., Isaksen K., Hilger P., Hermanns R. Permafrost distribution in steep rock slopes in Norway: measurements, statistical modelling and implications for geomorphological processes // Earth Surface Dynamics. 2019. No. 7. P. 1019–1040. URL: https://doi.org/10.5194/esurf-7-1019-2019

8. Westermann S., Ostby T. I., Gisnas K., Schuler T. V., Etzelmüller B. A ground temperature map of the North Atlantic permafrost region based on remote sensing and reanalysis data // The Cryosphere. 2015. Vol. 9. P. 1303–1319.

9. Obu J., Westermann S., Bartsch A., Berdnikov N., Christiansen H., Dashtseren A., Delaloye R., Elberling B., Etzelmuller B., Kholodov A., Khomutov A., Kaab A., Leibman M., Lewkowicz A., Panda S., Romanovsky V., Way R., Westergaard-Nielsen A., Wu T., Yamkhin J., Zou D. Northern Hemisphere permafrost map based on TTOP modelling for 2000–2016 at 1 km^2 scale // Earth-Science Reviews. 2019. No. 193. P. 299–316. URL: https://doi.org/10.1016/j.earscirev.2019.04.023

10. Tao J., Koster R., Reichle R., Forman B., Xue Y., Chen R., Moghaddam M. Permafrost variability over the Northern Hemisphere based on the MERRA-2 reanalysis // The Cryosphere. 2019. No. 13. P. 2087–2110. URL: https://doi.org/10.5194/tc-13-2087-2019

11. Радин А. И. Особенности эксплуатации технологических скважин СПВ в криолитозоне // Новые идеи в науках о Земле: матер. XIV Междунар. науч.-практ. конф. М.: РГГУ. Т. 4. 2019. С. 293–294.

12. Зверев Г. В., Тарасов А. Ю. Расчет и анализ воздействия многолетнемерзлых пород на крепление скважины № 338 Ванкорского месторождения во время эксплуатации // Вестник Пермского национального исследовательского политехнического университета. Геология. Нефтегазовое и горное дело. 2013. № 8. С. 41–51.

13. Арсентьев Ю. А., Назаров А. П., Забайкин Ю. В., Иванов А. Г. О расчете эксплуатационных колонн из полимерных материалов для условий многолетнемерзлых пород // Актуальные проблемы и перспективы развития экономики: российский и зарубежный опыт. 2019. № 21. С. 27–32.

14. Кузнецов В. Г. Техника и технология повышения долговечности крепи скважин в криолитозоне (проблемы и решения): автореф. дис. … д-ра техн. наук. Тюмень, 2004. 50 с.

15. Леонов Е. Г., Зайцев О. Ю. Расчет содержания фаз и давления при замерзании водосодержащих сред в заколонном и межколонном пространствах скважин при промерзании // Строительство нефтяных и газовых скважин на суше и на море. 2005. № 1. С. 10–16.

16. Стетюха В. А., Железняк И. И. Методика расчета на устойчивость эксплуатационной колонны из полимерного материала в многолетнемерзлых породах // Записки Горного института. 2020. Т. 241. С. 22–28. DOI: 10.31897/PMI.2020.1.22

17. Khademi Zahedi R., Shishesaz M. Application of a finite element method to stress distribution in burried patch repaired polyethylene gas pipes // Underground Space. 2019. Vol. 4(1). P. 48–58. URL: https://doi.org/10.1016/j.undsp.2018.05.001

18. Kamarainen J. Studies in ice mechanics. Helsinki: Helsinki University of Technology, 1993. 182 p.

19. Бычковский Н. Н., Гурьянов Ю. А. Ледовые строительные площадки, дороги и переправы. Саратов: СГТУ, 2005. 260 с.

20. Рудов С. Е., Шапиро В. Я., Григорьев И. В., Куницкая О. А., Григорьева О. И. Математическое моделирование процесса уплотнения мерзлого почвогрунта под воздействием лесных машин и трелевочных систем // Системы. Методы. Технологии. 2018. № 3(39) . С. 73–78. DOI: 10.18324/2077-5415-2018-3-73-78

Поступила в редакцию 15 октября 2021 года

Сведения об авторах:

Стетюха Владимир Алексеевич – доктор технических наук, доцент, профессор кафедры сопротивления материалов и механики Забайкальского государственного университета. E-mail: stetjukha_chita@mail.ru; https://orcid.org/0000-0002-4553-9558

Для цитирования: Стетюха В. А. Расчет эксплуатационной колонны из полимерного материала при асимметричном обжатии льдом в многолетнемерзлых породах // Известия вузов. Горный журнал. 2021. № 8. С. 15–23 (In Eng.). DOI: 10.21440/0536-1028-2021-8-15-23

For citation: Stetiukha V. A. Calculating the polymer operating string under asymmetric ice compression in permafrost. *Izvestiya vysshikh uchebnykh zavedenii. Gornyi zhurnal = Minerals and Mining Engineering*. 2021; 8: 15–23. DOI: 10.21440/0536-1028-2021-8-15-23